✳ Alternate Version : Woman jumps on Man's back.

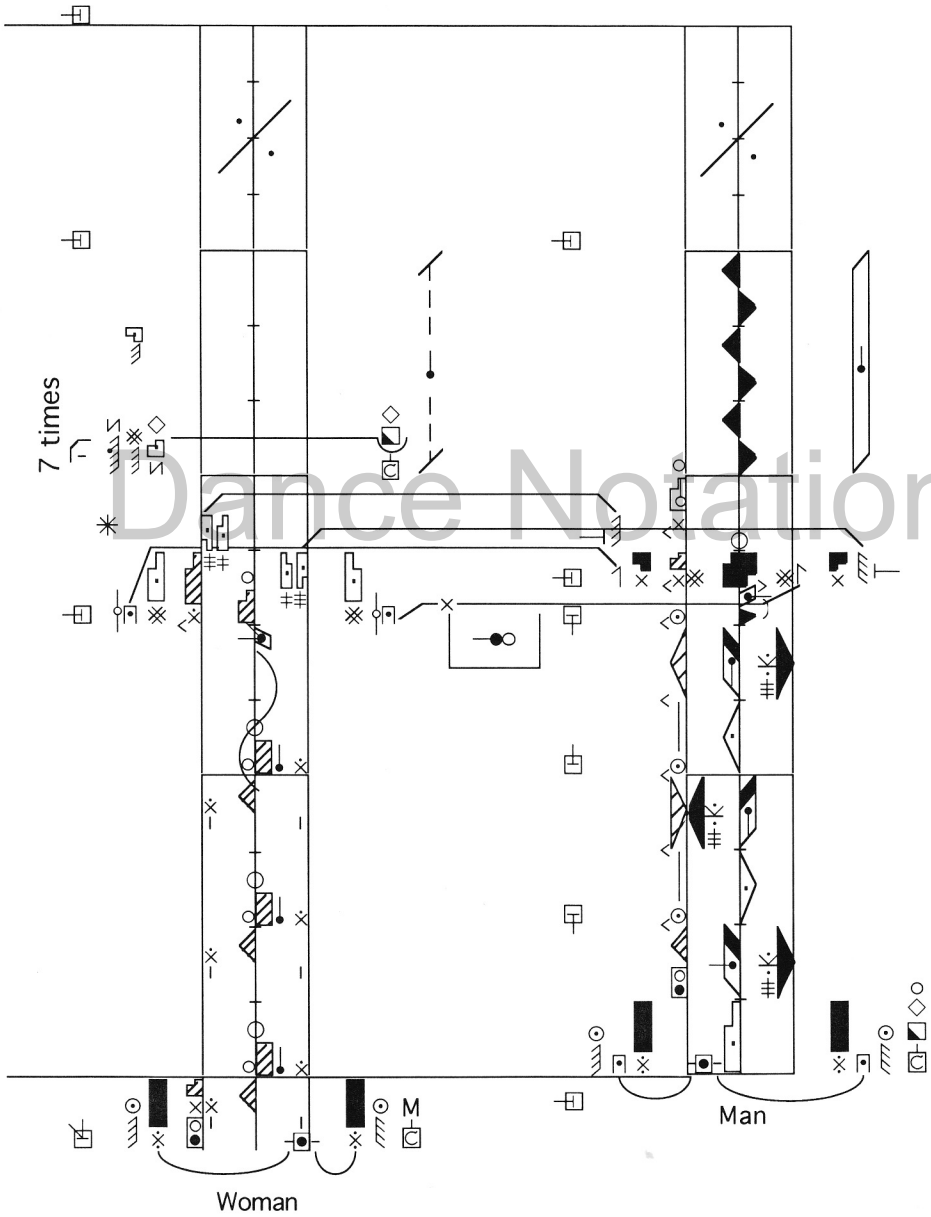

1st Duet

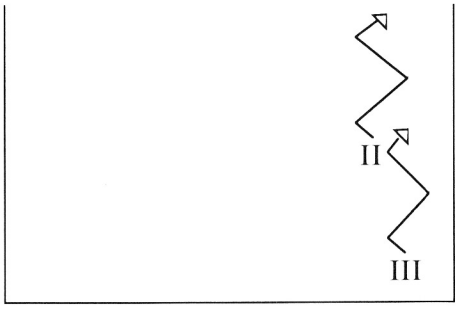

74-75 Detail for II and III

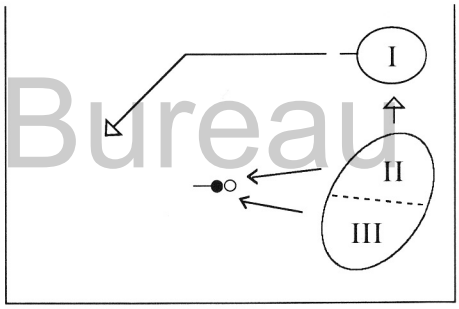

72-75

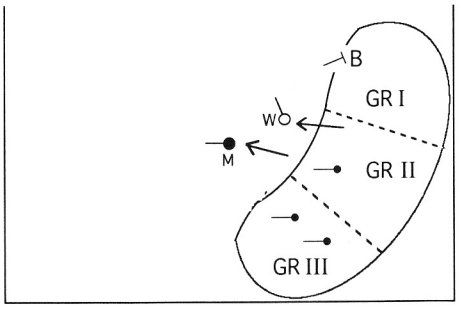

72 1st Duet

1st Duet walks out of group II or III.

Group I : No men (3,4 women)
Group II : includes 1 man
Group III : includes 2 men

Dance Notation Bureau